CUSTOMER DRAWING

REV.	DESCRIPTION	DESIGN	APRROVAL	DATE
A1	INITIAL RELEASE	Haojin Sun	Rongzhe Guo	2026.07.10

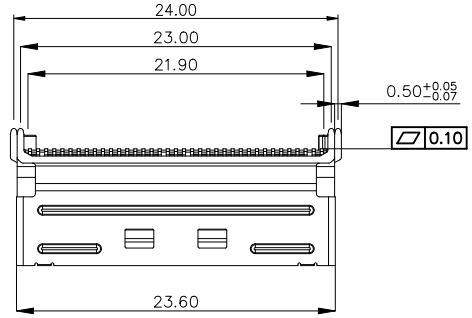

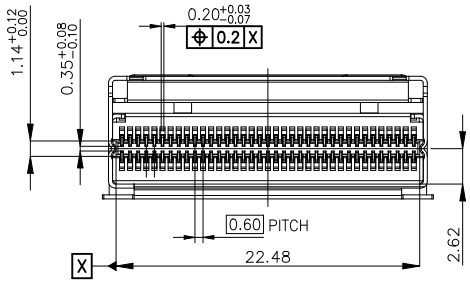

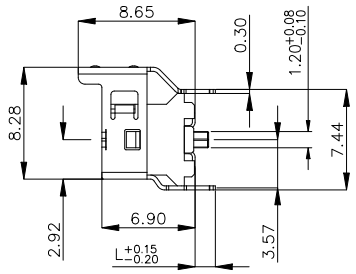

(SEE LATCH PIN LENGTH OPTIONS)

NOTES:
1. MATERIAL:
1.1 HOUSING: LCP, UL94V−0; COLOR: BLACK
1.2 CONTACT: COPPER ALLOY.
1.3 LATCH: STAINLESS STEEL.
2. FINISH:
2.1 CONTACT:
50u" MIN. NICKEL PLATING OVERALL.
15u" or 30u" MIN. GOLD ON CONTACT AREA.
100u" MIN. MATT TIN PLATING ON SOLDER TAIL.
2.2 LATCH:
50u" MIN. NICKEL PLATING ON SOLDER TAIL.
3. HALOGEN−FREE PRODUCT P/N:
PSL060−746 X −T X A− 1 H
CONTACT AREA PLATING:
3: 30u" GOLD ON CONTACT AREA.
7: 15u" GOLD ON CONTACT AREA.
PACKAGE METHOD:
1: TAPE & REEL
LATCH PIN LENGTH OPTIONS:
4: L= 1.30mm
4. CAP REMOVED AFTER REFLOW PROCESS.

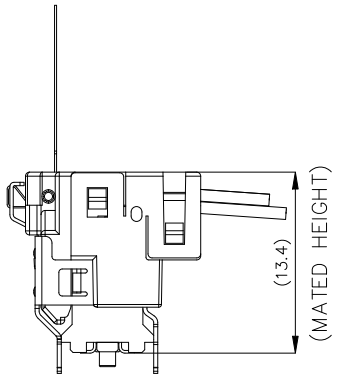

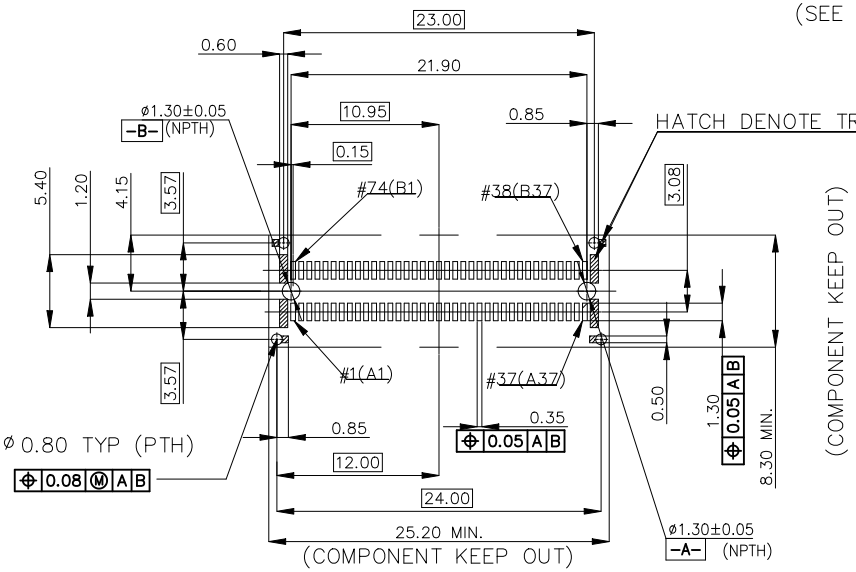

X.± 1	X.°±3°
.X± 0.30	.X°±2°
.XX± 0.20	.XX°±1°
.XXX± 0.10	.XXX°±0.5°
UNITS:	mm

THESE DRAWINGS AND SPECIFICATIONS ARE THE PROPERTY OF LUXSHARETECH AND SHALL NOT BE REPRODUCED, COPIED OR CUED IN ANY MANNER WITHOUT THE PRIOR WRITTEN CONSENT OF LUXSHARETECH

PART NO.: PSL060-746 X -T X A-1H

TITLE: SLIMSAS X8 VT LOW PROFILE RECEPTACLE 74 POSITION

APPD: Rongzhe Guo

CHKD: Hengshan Cheng

DRAW: Haojin Sun 2026.07.10

LUXSHARETECH

CUSTOMER P/N: N/A

DWG NO: PSL060-7463 -T1A-1H

SCALE	SHEET	REV.
1:1	1/2	A1

CUSTOMER DRAWING

REV.	DESCRIPTION	DESIGN	APRROVAL	DATE

SLIMSAS X8 CONNECTOR PIN ASSIGNMENT			
SIGNAL	PIN ASSIGN	SIGNAL	PIN ASSIGN
GND	A1	GND	B1
RX 0+	A2	TX 0+	B2
RX 0−	A3	TX 0−	B3
GND	A4	GND	B4
RX 1+	A5	TX 1+	B5
RX 1−	A6	TX 1−	B6
GND	A7	GND	B7
SIDEBAND 7A	A8	SIDEBAND 0A	B8
SIDEBAND 4A	A9	SIDEBAND 1A	B9
SIDEBAND 3A	A10	SIDEBAND 2A	B10
SIDEBAND A+	A11	SIDEBAND 5A	B11
SIDEBAND A−	A12	SIDEBAND 6A	B12
GND	A13	GND	B13
RX 2+	A14	TX 2+	B14
RX 2−	A15	TX 2−	B15
GND	A16	GND	B16
RX 3+	A17	TX 3+	B17
RX 3−	A18	TX 3−	B18
GND	A19	GND	B19
RX 4+	A20	TX 4+	B20
RX 4−	A21	TX 4−	B21
GND	A22	GND	B22
RX 5+	A23	TX 5+	B23
RX 5−	A24	TX 5−	B24
GND	A25	GND	B25
SIDEBAND 7B	A26	SIDEBAND 0B	B26
SIDEBAND 4B	A27	SIDEBAND 1B	B27
SIDEBAND 3B	A28	SIDEBAND 2B	B28
SIDEBAND B+	A29	SIDEBAND 5B	B29
SIDEBAND B−	A30	SIDEBAND 6B	B30
GND	A31	GND	B31
RX 6+	A32	TX 6+	B32
RX 6−	A33	TX 6−	B33
GND	A34	GND	B34
RX 7+	A35	TX 7+	B35
RX 7−	A36	TX 7−	B36
GND	A37	GND	B37
NOTE: ALL "GND" PINS ARE SHORTED			

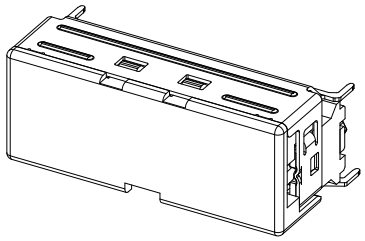

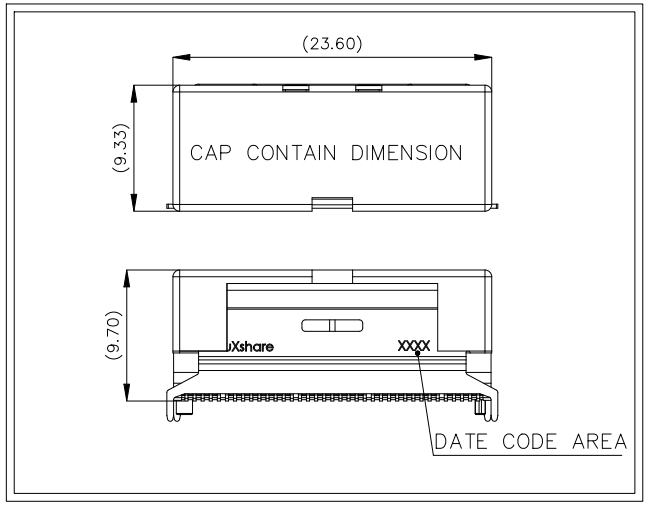

X.± 1	X.°±3°
.X± 0.30	.X°±2°
.XX± 0.20	.XX°±1°
.XXX± 0.10	.XXX°±0.5°
UNITS:	mm

THESE DRAWINGS AND SPECIFICATIONS ARE THE PROPERTY OF LUXSHARETECH AND SHALL NOT BE REPRODUCED, COPIED OR CUED IN ANY MANNER WITHOUT THE PRIOR WRITTEN CONSENT OF LUXSHARETECH

PART NO.: PSL060-746 X -T X A-1H

TITLE: SLIMSAS X8 VT LOW PROFILE RECEPTACLE 74 POSITION

APPD: Rongzhe Guo

CHKD: Hengshan Cheng

DRAW: Haojin Sun 2026.07.10

LUXSHARETECH

CUSTOMER P/N: N/A

DWG NO: PSL060-7463 -T1A-1H

SCALE	SHEET	REV.
1:1	2/2	A1